	Pre.0	2019.5.24

Specification For Approval

■ Preliminary specification
□ Final specification

Title	5.0”1080*1080 TFT-LCD (LCM)

Buyer	
Model	

Supplier	
Model	QT050YMM-N41

TITLE/SIGNATURE	DATE
_____	_____
_____	_____
_____	_____
_____	_____

ITEM	SIGNATURE/DATE
Approved	_____
Reviewed	_____
Reviewed	_____
Prepared	_____
ts	

CONTENT LIST

Cover---------- 1

Content List---------- 2

Record of Revisions---------- 3

1. General Description---------- 4

2. Absolute Maximum Ratings---------- 6

3. Electrical Specifications---------- 7

4. Interface Connection---------- 9

5. Signal Timing Specification---------- 10

6. Power ON/OFF Sequence---------- 11

7. Optical Specifications---------- 12

8. Mechanical Characteristics---------- 15

9. Reliability Test---------- 17

10. Packing Method---------- 18

11. Carton Label---------- 19

12. Handling & Cautions---------- 20

13. Applicable Scope---------- 22

Record of Revisions

Revision	Date	Page	Description	Released by
Pre.0	2019.5.24		Initial Released	Liumin

1.0 GENERAL DESCRIPTION

1.1 Introduction

050YMM-N40 is a color active matrix TFT-LCD Panel using LTPS TFT's (Thin Film Transistors) as an active switching devices. This model is composed of a TFT-LCD Panel, a driving circuit and a back light system. It is a transmissive type display operating in the normal black. This TFT-LCD has a 5.0 inch diagonally measured active area with FHD resolutions (1080 horizontal by 1080 vertical pixel array). Each pixel is divided into Red, Green, Blue dots which are arranged in 1pixel 2 domain and this panel can display 16.7M colors.

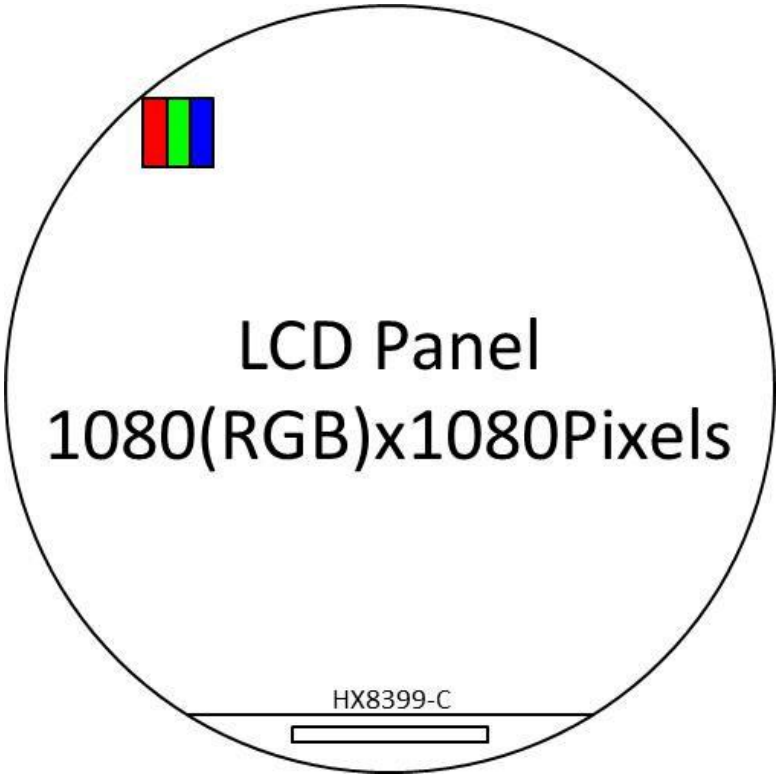

1.2 Features

- 0.2t Glass (Single)
- High contrast ratio and wide viewing angle
- Module Design
- RoHS Compliant

1.3 General Specifications (H: horizontal length, V: vertical length**)**

Parameter	Specification	Unit	Remark
Active Area	127.008 (H) ×127.008 (V)	mm	circle
Number of Pixels	1080(H) RGB × 1080(V)	pixels	
Pixel Pitch	0.1176 (H) ×0.1176 (V)	mm	
Pixel Arrangement	1pixel 2domain		
Display Colors	16.7 M	colors	
Color Gamut	65%(Min.) 70%(typ.)		
Display Mode	Normally Black, Transmissive mode		
Dimensional Outline	136.531x132.208x1.98	mm	
Viewing Direction (Human Eye)	U/D/L/R free viewing direction		Note 1,2

Note:

1. At the U/D/L/R direction, the viewing angle is same;
2. The TFT and CF LC Algin Direction;

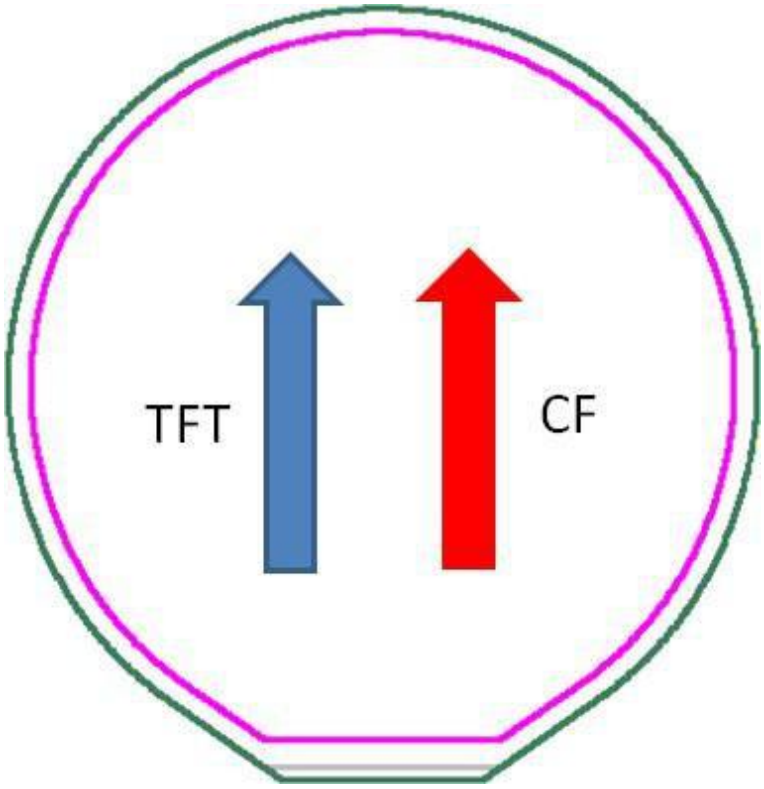

2.0 ABSOLUTE MAXIMUM RATINGS

The absolute maximum ratings are list on table as follows. When used out of the absolute maximum ratings, the LSI may be permanently damaged. Using the LSI within the following electrical characteristics limit is strongly recommended for normal operation. If these electrical characteristic conditions are exceeded during normal operation, the LSI will malfunction and cause poor reliability.

Parameter	Symbol	Spec			Unit
		Min.	Typ.	Max.	
Logic Power Supply Voltage	IOVCC	-0.3		+3.6	V
Analog Positive Power Supply	VSP	-0.3		+6.6	V
Analog Negative Power Supply	VSN	0		-6.6	V
Back-light Power Supply Voltage	V_{LED}		37.2	38.4	V
Back-light LED Current	I_{LED}		20		mA
Operating Temperature	T_{OT}	-20		60	℃
Storage Temperature	T_{ST}	-30		75	℃

Note:

If the absolute maximum rating of even is one of the above parameters is exceeded even momentarily, the quality of the product may be degraded. Absolute maximum ratings, therefore, specify the values exceeding which the product may be physically damaged. Be sure to use the product within the range of the absolute maximum ratings.

3.0 ELECTRICAL SPECIFICATIONS

3.1 TFT LCD Module DC Characteristics

Parameter	Symbol	Min	Typ	Max	Unit	Remark
Power Supply Input Voltage	IOVCC	1.65	1.8	3.3	V	-
Analog Positive Power Supply	VSP	4.8	5	6	V	
Analog Negative Power Supply	VSN	-6	-5	-4.8	V	
Low Level Input Voltage	VIL	0		0.3* IOVCC	V	
High Level Input Voltage	V_{IH}	0.7* IOVCC		IOVCC	V	
Power Consumption	P_D	-	-	-	W	Note
	PBL	-	0.744	0.768	W	
	PTotal	-		-	W	

Note:

Frame rate=60HZ, Typ. Pattern White pattern, worst case pattern 1×1 checker 25℃.

3.2 Backlight Driving Conditions

Parameter	Symbol	Min	Typ	Max	Unit	Remark
LED Forward Voltage	V_F		37.2	38.4	V	-
LED Forward Current	I_F		20		mA	-
LED Power Consumption	PLED		0.744	0.768	W	Note 1

Notes:

1. Calculator Value for reference ILED×VLED×LED Quantity = PLED

2. The LED Life-time define as the estimated time to 50% 30000hrs degradation of initial luminous.

3.3 Block Diagram

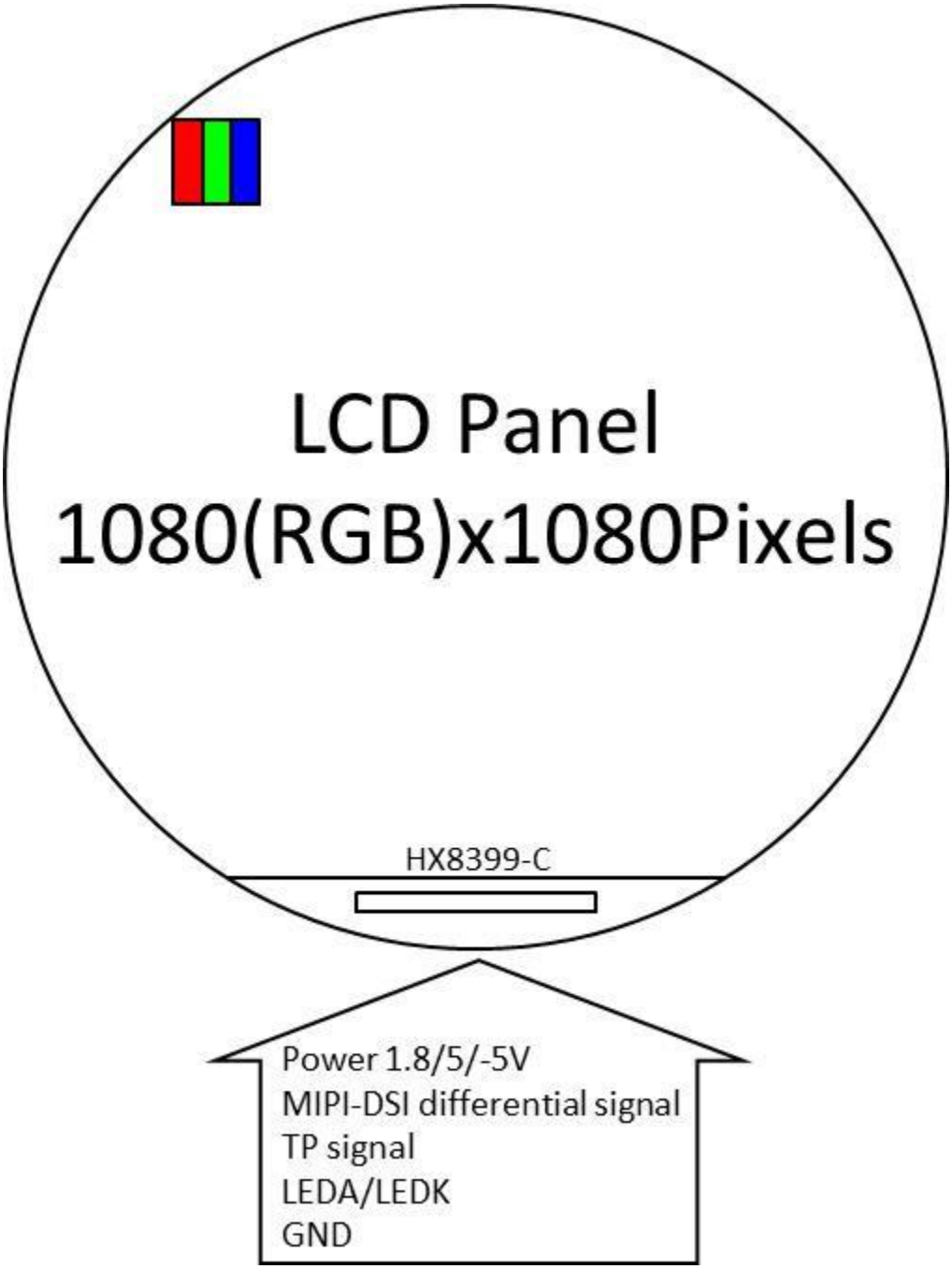

4.0 INTERFACE CONNECTION

4.1 Connector Part Number

Connector Name / Designation	Signal Connector
Manufacturer	Hirose
Connector Model Number	DF40C-50DP-0.4V

4.2 Electrical Interface Connection

Pin NO.	Pin name	Function	Pin NO.	Pin name	Function
49	GND	Ground	50	GND	Ground
47	GND	Ground	48	RESET	Disp reset
45	NC	NC	46	TE	Disp tearing effect out
43	NC	NC	44	LEDPWM	Backlight pwm output
41	NC	NC	42	GND	Ground
39	NC	NC	40	NC	NC
37	GND	Ground	38	VDD(+5)	Disp +5V analog rail
35	NC	NC	36	VDD(+5)	Disp +5V analog rail
33	NC	NC	34	NC	NC
31	GND	Ground	32	VDD(-5)	Display -5V analog rail
29	LAN3_N	Disp MIPI lane 3-	30	VDD(-5)	Display -5V analog rail
27	LAN3_P	Disp MIPI lane 3+	28	NC	NC
25	GND	Ground	26	GND	Ground
23	LAN0_N	Disp MIPI lane 0-	24	IOVCC	Disp digital power
21	LAN0_P	Disp MIPI lane 0+	22	IOVCC	Disp digital power
19	GND	Ground	20	GND	Ground
17	CLK_N	Disp MIPI CLK -	18	ID_PIN1	ID pd to GND (BOE)
15	CLK_P	Disp MIPI CLK +	16	ID_PIN2	ID pu to 1.8V (BOE)
13	GND	Ground	14	GND	Ground
11	LAN1_N	Disp MIPI lane 1-	12	LEDA	LED Anode
9	LAN1_P	Disp MIPI lane 1+	10	LEDA	LED Anode
7	GND	Ground	8	GND	Ground
5	LAN2_N	Disp MIPI lane 2-	6	LEDK	LED cathode
3	LAN2_P	Disp MIPI lane 2+	4	LEDK	LED cathode
1	GND	Ground	2	GND	Ground

5.0 SIGNAL TIMING SPECIFICATION Vertical Timing

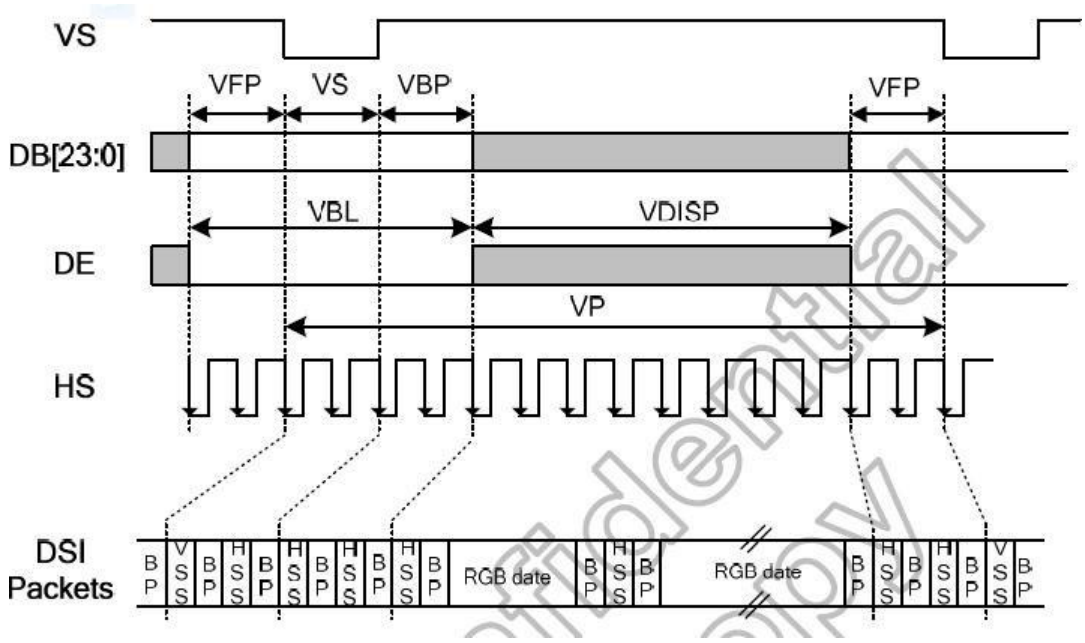

Vertical Resolution=528+8xNL (VSSA=0V, VDD1=1.8V, VDD3=2.8V, T_A=25°C)

Parameter	Symbol	Condition	Spec.			Unit
			Min.	Typ.	Max.	
Vertical cycle	VP	-	534+8xNL	-	-	Line
Vertical low pulse width	VS	-	2	-	Note(1)	Line
Vertical front porch	VFP	-	2	-	-	Line
Vertical back porch	VBP	-	2	-	Note(1)	Line
Vertical data start point	-	VS+VBP	4	-	Note(1)	Line
Vertical blanking period	VBL	VS+VBP+VFP	6	-	-	Line
Vertical active area	-	VDISP	-	528+8xNL	-	Line
Vertical Refresh rate	VRR	-	-	60	-	Hz

Note: (1) The VS and VBP pulse width are related to GSP and GCK timing. The GSP and GCK must be set at corresponding position for LCD normal display.

Panda Confidential Do Not Copy

Horizontal Timing

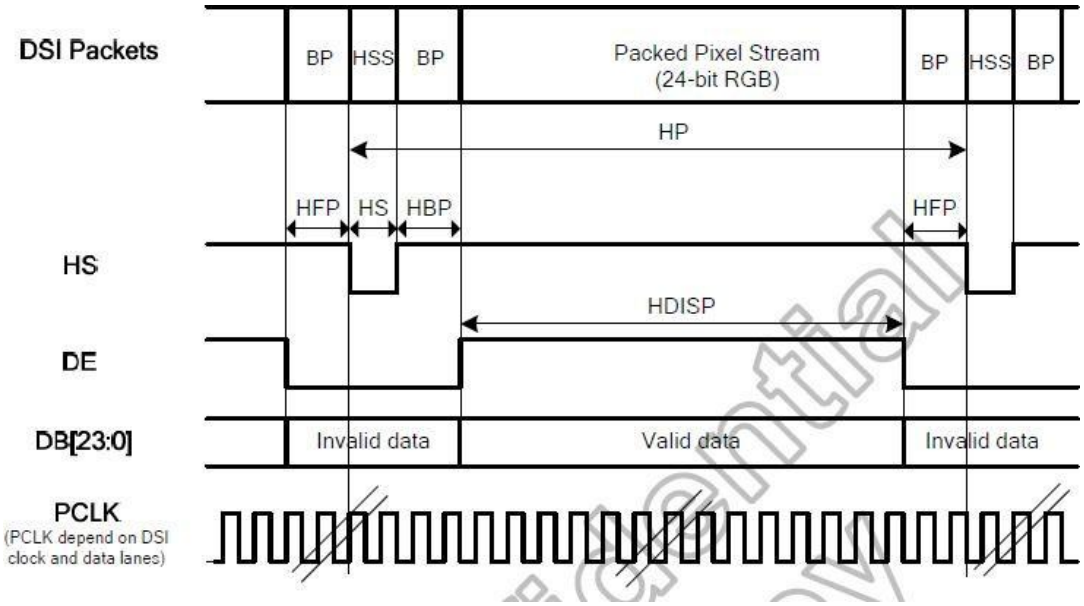

Horizontal Resolution=H_RES(1080/1024/960/900/800/720) (VSSA=0V, VDD1=1.8V, VDD3 = HS_VCC =2.8V, T_A=25°C)

Parameter	Symbol	Condition	Spec.			Unit
			Min.	Typ.	Max.	
HS cycle	HP	-	H_RES+66	-	-	DCK
HS low pulse width	HS	-	25	-	-	DCK
Horizontal back porch	HBP	-	25	-	-	DCK
Horizontal front porch	HFP	-	16	-	-	DCK
Horizontal data start point	-	HS+HBP	50 Note(1)	-	-	DCK
Horizontal blanking period	HBLK	HS+HBP+HFP	66	-	-	DCK
Horizontal active area	HDISP	-	-	H_RES	-	DCK

Note: (1) HS+HBP must larger than 50 PCLK.

Tianma Confidential Not Copy

6.0 POWER ON/OFF SEQUENCE

Power on/off Sequence

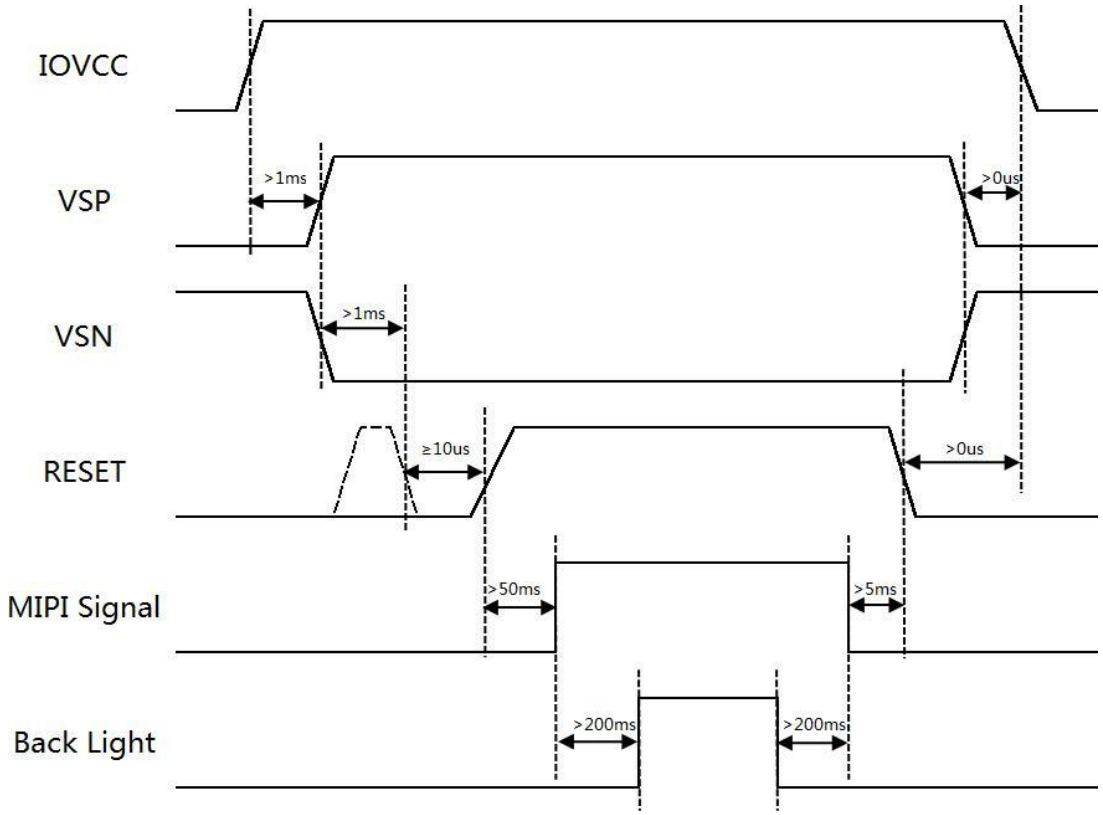

7.0 OPTICAL SPECIFICATIONS

7.1 Overview

The test of Optical specifications shall be measured in a dark room(ambient luminance≤ 1 lux and temperature = 25±2℃) with the equipment of Luminance meter system (Topcon SR-UL1R and Westar TRD-100A) and test unit shall be located at an approximate distance 50cm from the LCD surface at a viewing angle of θ and Φ equal to 0°.The center of the measuring spot on the Display surface shall stay fixed.

The backlight should be operating for 30 minutes prior to measurement.

7.2 Optical Specifications

Parameter		Symbol	Condition	Min.	Typ.	Max.	Unit	Remark
Viewing Angle	Horizontal	Θ3	CR>10	70	80		°	Note 1
		Θ9		70	80		°	
	Vertical	Θ12		70	80		°	
		Θ6		70	80		°	
Contrast Ratio		CR	Θ= 0°	800	1300			Note 2
Luminance		cd/m2	Θ= 0°	350	400		nit	Note 3
White Uniformity		%	Θ= 0°	70				Note 4
NTSC		%	Θ= 0°	65	70			
Reproduction Of color	Red	Rx	Θ= 0°	0.656	0.686	0.716		Note 5 * Module
		Ry		0.274	0.304	0.334		
	Green	Gx		0.234	0.264	0.294		
		Gy		0.599	0.629	0.659		
	Blue	Bx		0.117	0.147	0.177		
		By		0.017	0.047	0.077		
White		Wx	Θ= 0°	0.276	0.306	0.336		
		Wy		0.288	0.318	0.348		
Response Time		Tr+Tf Θ= 0°	Ta=+25℃			40	ms	Note 6

Note:

1. Viewing angle is the angle at which the contrast ratio is greater than 10. The viewing are determined for the horizontal or 3, 9 o'clock direction and the vertical or 6, 12 o'clock direction with respect to the optical axis which is normal to the LCD surface (see FIG.1).

2. Contrast measurements shall be made at viewing angle of Θ= 0° and at the center of the LCD surface. Luminance shall be measured with all pixels in the view field set first to white, then to the dark (black) state. (See FIG. 1) Luminance Contrast Ratio (CR) is defined mathematically.

$$CR = \frac{\text{Luminance when displaying a white raster}}{\text{Luminance when displaying a black raster}}$$

3. Surface luminance is the center point across the LCD surface 50cm from the surface with all pixels displaying white. This measurement shall be taken at the locations shown in FIG. 1.

4. Uniformity measurement shall be taken at the locations shown in FIG. 2, for a total of the measurements per display, measure surface luminance of these nine points across the LCD surface 50cm from the surface with all pixels displaying white.

$$\text{Uniformity} = \frac{\text{Min Luminance of 9 points}}{\text{Max Luminance of 9 points}} \times 100\%$$

5. The color chromaticity coordinates specified in Table1 shall be calculated from The spectral data measured with all pixels first in red, green, blue and white. Measurements shall be made at the center of the Module.

6. The electro-optical response time measurements shall be made as FIG.3 by switching the "data" input signal ON and OFF.

The times needed for the luminance to change from 10% to 90% is Tr and 90% to 10% is Tf.

Figure 1. Measurement Set Up

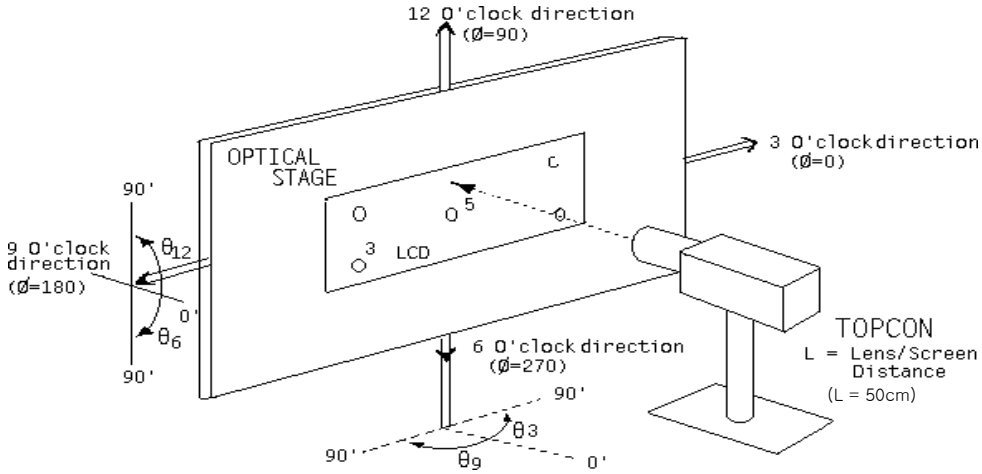

Figure 2. Uniformity Measurement Locations

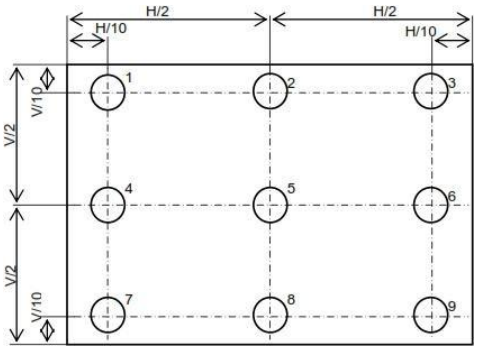

Figure 3. Response Time Testing

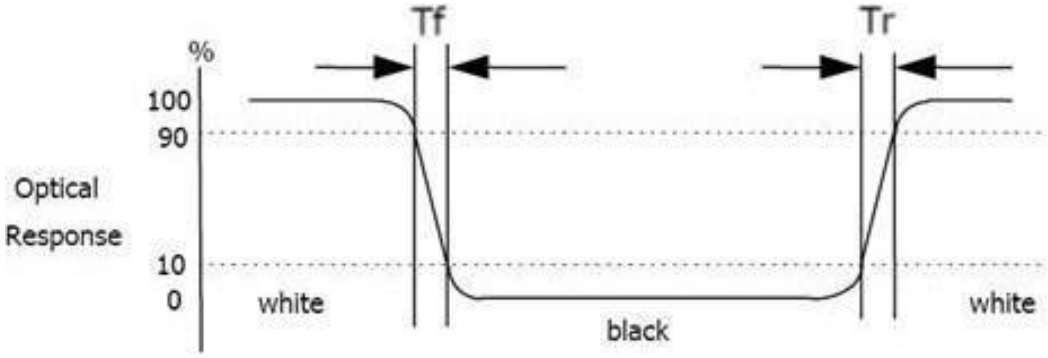

8.0 MECHANICAL CHARACTERISTICS

8.1 Dimension Requirements for LCD Part

Mechanical outlines for the panel (H: horizontal length, V: Vertical length)

Parameter	Specification	Unit	Remark
Panel size	129.808(H) ×133.258(V)	mm	
CF size	129.808(H) × 130.908(V)	mm	
Active area	127.008(H) × 127.008(V)	mm	circle
Number of pixels	1080(H)RGB × 1080(V)	pixels	
	(1 pixel = R + G + B dots)		
Pixel pitch	0.1176(H) × 0.1176(V)	mm	
Pixel arrangement	1pixel 2domain		
Dimensional outline	136.531x132.208x1.98	mm	circle
Display mode	Normally Black		

Figure 5. LCM Outline Dimension (unit: mm)

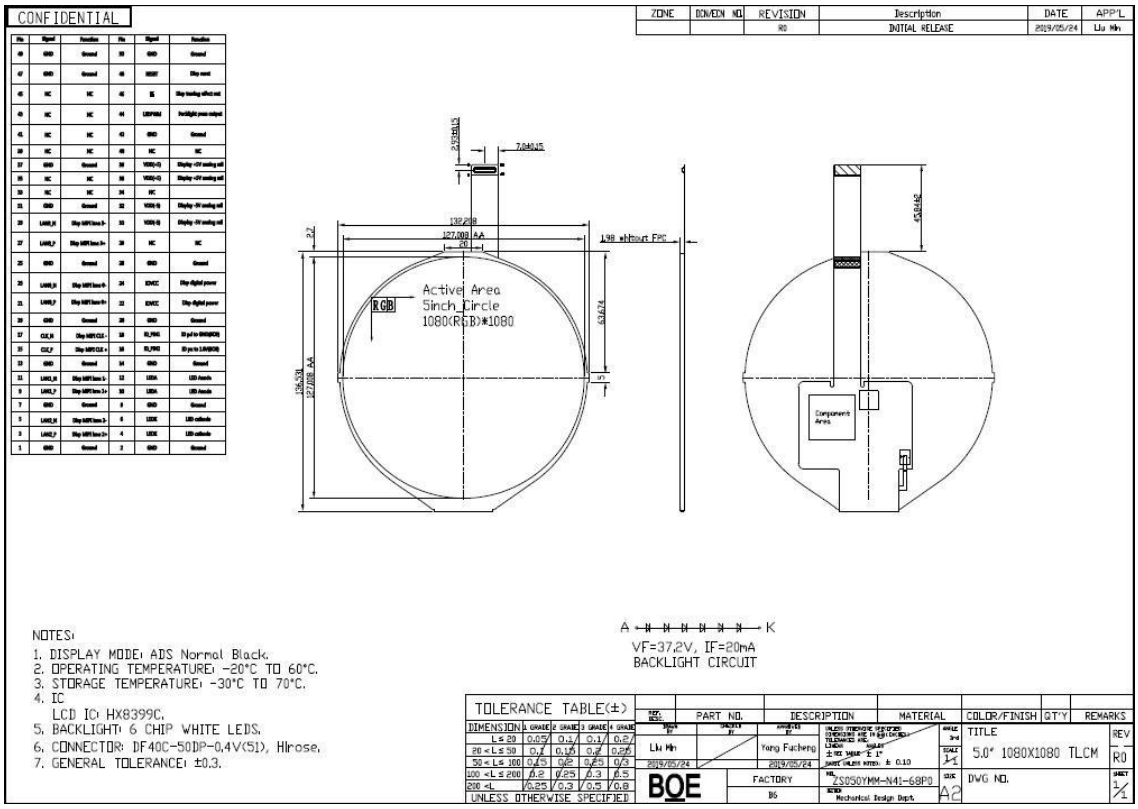

9.0 RELIABILITY TEST

NO.	Test Item	Test Condition
1	High Temp Operation	60 ℃ for 240 hours
2	Low Temp Operation	-20 ℃ for 240 hours
3	High Temp/ High humidity Operation	60 ℃/ 90% RH for 100 hours
4	High Temp Storage	75 ℃ for 240 hours
5	High Temp/ High Humidity Storage	65 ℃/ 90% RH for 100 hours
6	Low Temp Storage	-30 ℃ for 240 hours
7	Thermal Shock	-30 ℃ for 45min and then 75 ℃ for 45 min, 27 cycles
8	ESD test	Contact=4KV,Air=8KV

10.0 PACKING METHOD

11.0 CARTON LABEL

TBD

12.0 HANDDLING & CAUTIONS

12.1 Mounting Method

● The panel of the LCM consists of two thin glasses with polarizer which easily get damaged. So extreme care should be taken when handling the LCM.

● Excessive stress or pressure on the glass of the LCM should be avoided. Care must be taken to insure that no torsional or compressive forces are applied to the LCM unit when it is mounted.

● If the customer's set presses the main parts of the LCM, the LCM may show the abnormal display. But this phenomenon does not mean the malfunction of the LCM and should be pressed by the way of mutual agreement.

● Todetermine the optimum mounting angle, refer to the viewing angle range in the specification for each model.

● Mount a LCM with the specified mounting parts.

12.2 Caution of LCM Handling and Cleaning

● Since the LCM is made of glass, do not apply strong mechanical impact or static load onto it. Handling with care since shock, vibration, and careless handling may seriously affect the product. If it falls from a high place or receives a strong shock, the glass maybe broken.

● The polarizer on the surface of panel are made from organic substances. Be very careful for chemicals not to touch the polarizer or it leads the polarizer to bedeteriorated.

● If the use of a chemical is unavoidable, use soft cloth with solvent recommended belowto clean the LCM's surface with wipe lightly.

-IPA (Isopropyl Alcohol), Ethyl Alcohol, Tri-chloro, tri-florothane.

● Do not wipe the LCM's surface with dry or hard materials that will damage the polarizer and others. Do not use the following solvent—Water, acetone, Aromatics.

● It is recommended that the LCM be handled with soft gloves during assembly, etc. The polarizer on the LCM's surface are vulnerable to scratch and thus to be damaged by shape particles.

● Do not drop water or any chemicals onto the LCM's surface.

● A protective film is supplied on the LCM and should be left in place until the LCM is required for operation.

● The ITO pad area needs special careful caution because it could be easily corroded. Do not contact the ITO pad area with HCFC, Soldering flux, Chlorine, Sulfur, saliva or fingerprint. To prevent from the ITO corrosion, customers are recommended that the ITO area would be covered by UV or silicon.

● Please handle FPC with care.

12.3 Caution Against Static Charge

● The LCM use C-MOS LSI drivers, so customers are recommended that any unused input terminal would be connected to Vdd or Vss, do not input any signals before power is turn on, and ground you body, work/assembly area, assembly equipments to protect against static electricity.

● Remove the protective film slowly, keeping the removing direction approximate 30-degree not vertical from panel surface, if possible, under ESD control device like ion blower, and the humidity of working room should be kept over 50%RH to reduce the risk of static charge.

● Avoid the use work clothing made of synthetic fibers. We recommend cotton clothing or other conductivity-treated fibers.

● In handling the LCM, wear non-charged material gloves. And the conducting wrist tothe earth and the conducting shoes to the earth are necessary.

12.4 Caution For Operation

● It is indispensable to drive the LCM within the specified voltage limit since the higher voltage than the limit causes LCM's life shorter. An electro-chemical reaction due to DC causes undesirable deterioration of the LCM so that the use of DC drive should avoid.

● Do not connect or disconnect the LCM to or from the system when power is on.

● Never use the LCM under abnormal conditions of high temperature and high humidity.

● When expose to drastic fluctuation of temperature(hot to cold or cold to hot), the LCM may be affected; specifically, drastic temperature fluctuation from cold to hot, produces dew on the LCM's surface which may affect the operation of the polarizer on the LCM.

● Response time will be extremely delay at lower temperature than the operating temperature range and on the other hand LCM may turn black at temperature above its operational range. However those phenomenon do not mean malfunction or out of order with the LCM. The LCM will revert to normal operation once the temperature returns to the recommended temperature range for normal operation.

● Do not display the fixed pattern for a long time because it may develop image sticking due to the LCM structure. If the screen is displayed with fixed pattern, use a screen saver.

● Do not disassemble and/or re-assemble LCM module

12.5 Packaging

● Modules use LCM element, and must be treated as such.

-Avoid intense shock and falls from a height.

-To prevent modules from degradation, do not operate or store them exposed directly to sunshine or high temperature/humidity for long periods.

12.6 Storage

- A slight dew depositing on terminals is a cause for electro-chemical reaction resulting in terminal open circuit. Relative humidity of the environment should therefore be kept below 60%RH.
- Original protective film should be used on LCM's surface (polarizer). Adhesive type protective film should be avoided, because it may change color and/or properties of the polarizer.
- Do not store the LCM near organic solvents or corrosive gasses.
- Keep the LCM safe from vibration, shock and pressure.
- Black or white air-bubbles may be produced if the LCM is stored for long time in the lower temperature or mechanical shocks are applied onto the LCM.
- In the case of storing for a long period of time for the purpose or replacement use, the following ways are recommended.

-Store in a polyethylene bag with sealed so as not to enter fresh air outside in it.
-Store in a dark place where neither exposure to direct sunlight nor light is.
-Keep temperature in the specified storage temperature range.
-Store with no touch on polarizer surface by the anything else. If possible, store the LCM in the packaging situation when it was delivered.

12.7 Safety

- For the crash damaged or unnecessary LCM, it is recommended to wash off liquid crystal by either of solvents such as acetone and ethanol an should be burned up later.
- In the case of LCM is broken, watch out whether liquid crystal leaks out or not. If your hands touch the liquid crystal, wash your hands cleanly with water and soap as soon as possible.
- If you should swallow the liquid crystal, first, wash your mouth thoroughly with water, then drink a lot of water and induce vomiting, and then, consult a physician.
- If the liquid crystal get in your eyes, flush your eyes with running water for at least fifteen minutes.
- If the liquid crystal touches your skin or clothes, remove it and wash the affected part of your skin or clothes with soap and running water.

13.0 Applicable Scope

- This product specification only applies to the products manufactured and sold by our company.
- Any specification, quality etc. about other parts mentioned in this product spec are no concern of our compan